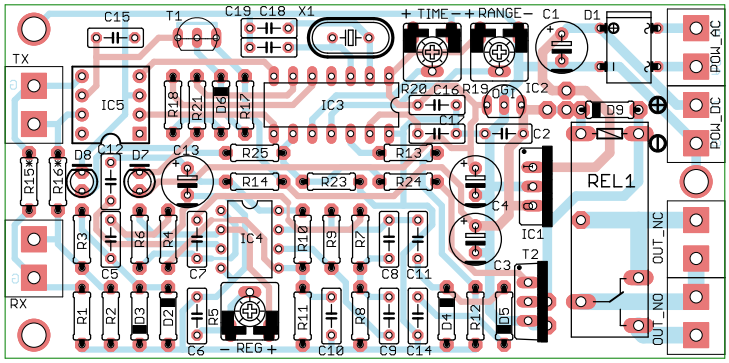
C15
T1
C19 C18 X1
+ TIME −
+ RANGE −
C1
D1
TX
IC5
R18
R21
D6
R17
IC3
R20 C16
R19
OG1
IC2
C14
C2
D9
POW_AC
POW_DC
D8
C12
D7
C13
R25
R13
R15*
R16*
R14
R23
R24
C4
REL1
IC4
R10
R9
R7
IC1
R3
R6
R4
C3
T2
OUT_NC
C5
C7
C8 C11
RX
R1
R2
D3
D2
R5
R11
R8
D4
R12
D5
OUT_NO
C6
− REG +
C10
C9 C14